CHIPPEWA COUNTY

PLANNING & ZONING COMMITTEE

REGULAR MEETING

MAY 19, 2022

CHIPPEWA COUNTY COURTHOUSE, RM 302

4:30 PM

1. CALL TO ORDER

2. ROLL CALL

Attendee Name	Organization	Title	Status	Arrived
David Eisenhuth	Chippewa County	District 15 (Chair)	Present	
Jason Bergeron	Chippewa County	District 7 (Vice-Chair)	Present	
Dean Gullickson	Chippewa County	District 5	Present	
Caden Berg	Chippewa County	District 13	Present	
Chuck Hull	Chippewa County	District 19	Present	

3. MEMBERS OF THE PUBLIC WISHING TO BE HEARD

None.

4. CONSENT AGENDA

Motion to Approve Minutes.

RESULT:	**APPROVED [UNANIMOUS]**
MOVER:	Dean Gullickson, District 5
SECONDER:	Jason Bergeron, District 7 (Vice-Chair)
AYES:	Eisenhuth, Bergeron, Gullickson, Berg, Hull

1. Approve the Agenda

2. Approve the Minutes

   Planning & Zoning Committee - Regular Meeting - Mar 24, 2022 4:30 PM

5. PUBLIC HEARINGS - FOR DISCUSSION AND ACTION

1. 2022-0004 - Confidential Records - CUP - Town of Wheaton
   Motion to Approve the CUP as proposed in the submitted information.

RESULT:	**APPROVED [UNANIMOUS]**
MOVER:	Chuck Hull, District 19
SECONDER:	Dean Gullickson, District 5
AYES:	Eisenhuth, Bergeron, Gullickson, Berg, Hull

2. 2022-0005 - Micheal Dresel - Rezone - Town of Anson
   Motion to approve the rezoned as presented.

RESULT:	**APPROVED [UNANIMOUS]**
MOVER:	Jason Bergeron, District 7 (Vice-Chair)
SECONDER:	Caden Berg, District 13
AYES:	Eisenhuth, Bergeron, Gullickson, Berg, Hull

6. REPORTS

1. Planning & Zoning Committee Orientation - Doug Clary
   Clary provided an overview of the Department of Planning & Zoning.

2. Introduction to the County Highway T Corridor Mapping Project - Doug Clary
   Clary briefed the committee of the CTH T Corridor Mapping Project.

7. BUSINESS ITEMS

1. Establish Regular Committee Meeting Dates & Time
   Motion to approve the PZC meeting dates and times until March of 2024.

RESULT:	**APPROVED [UNANIMOUS]**
MOVER:	Dean Gullickson, District 5
SECONDER:	Jason Bergeron, District 7 (Vice-Chair)
AYES:	Eisenhuth, Bergeron, Gullickson, Berg, Hull

8. AGENDA ITEMS FOR FUTURE CONSIDERATION

Special meeting for June 1, 2022 at 1PM.

9. ADJOURN

Motion to Adjourn.

RESULT:	**APPROVED [UNANIMOUS]**
MOVER:	Chuck Hull, District 19
SECONDER:	Dean Gullickson, District 5
AYES:	Eisenhuth, Bergeron, Gullickson, Berg, Hull

DRAFT

CHIPPEWA COUNTY

PLANNING & ZONING COMMITTEE

REGULAR MEETING

MARCH 24, 2022

CHIPPEWA COUNTY COURTHOUSE, RM 302

4:30 PM

1. CALL TO ORDER

2. ROLL CALL

Attendee Name	Organization	Title	Status	Arrived
Chuck Hull	Chippewa County	District 14 (Chair)	Present	
Don Hauser	Chippewa County	District 6 (Vice-Chair)	Present	
Ronald McGill	Chippewa County	District 15	Excused	
David Eisenhuth	Chippewa County	District 11	Absent	
Dean Gullickson	Chippewa County	District 7	Present	

3. MEMBERS OF THE PUBLIC WISHING TO BE HEARD

None.

4. CONSENT AGENDA

Motion to Approve.

RESULT:	**APPROVED [UNANIMOUS]**
MOVER:	Dean Gullickson, District 7
SECONDER:	Don Hauser, District 6 (Vice-Chair)
AYES:	Hull, Hauser, Gullickson
ABSENT:	Eisenhuth
EXCUSED:	McGill

1. Approve the Agenda

2. Approve the Minutes

   Planning & Zoning Committee - Regular Meeting - Feb 24, 2022 4:30 PM

3. Schedule Next Meeting Date - Tentative: May 19, 2022 @ 4:30 PM

5. PUBLIC HEARINGS - FOR DISCUSSION AND ACTION

1. 2022-0002 - Bauer Rezone - Town of Eagle Point - Doug Clary
   Motion to Approve as Presented.

Minutes Acceptance: Minutes of Mar 24, 2022 4:30 PM (Consent Agenda)

RESULT:	**APPROVED [UNANIMOUS]**
MOVER:	Dean Gullickson, District 7
SECONDER:	Don Hauser, District 6 (Vice-Chair)
AYES:	Hull, Hauser, Gullickson
ABSENT:	Eisenhuth
EXCUSED:	McGill

6. BUSINESS ITEMS

1. Autumn Winds - Final Plat - Doug Clary
   Motion to Approve with the following conditions: (1) County Highway Approval of Access onto CTH J, (2) Stormwater Management Plans Approval, (3) Existing Buildings on Lots 14, 15 and 16 be removed and/or brought into conformance with the zoning ordinance requirements for setbacks to the proposed lot lines and other applicable zoning ordinance requirements.

RESULT:	**APPROVED [UNANIMOUS]**
MOVER:	Don Hauser, District 6 (Vice-Chair)
SECONDER:	Dean Gullickson, District 7
AYES:	Hull, Hauser, Gullickson
ABSENT:	Eisenhuth
EXCUSED:	McGill

7. AGENDA ITEMS FOR FUTURE CONSIDERATION

None.

8. ADJOURN

Motion to Adjourn.

RESULT:	**APPROVED [UNANIMOUS]**
MOVER:	Don Hauser, District 6 (Vice-Chair)
SECONDER:	Dean Gullickson, District 7
AYES:	Hull, Hauser, Gullickson
ABSENT:	Eisenhuth
EXCUSED:	McGill

STATEMENT OF EXPLANATION
2022-0004 - CONFIDENTIAL RECORDS - CUP - TOWN OF WHEATON

To allow a paper recycling facility (Confidential Records Inc) in the Highway Commercial District in accordance with sections 70-73(b)(9) and 70-108 of the Chippewa County Zoning Ordinance on Lot 13, Certified Survey Map 4803 (Parcel Number 22810-2342-7480313), which is located in the NW 1/4 of the SE 1/4, Section 23, Township 28 North, Range 10 West. Town of Wheaton Physical Address: 3273 56th Street.

(Publish – Chippewa Herald – May 5 and May 12, 2022)

CHIPPEWA COUNTY PLANNING & ZONING COMMITTEE
NOTICE OF PUBLIC HEARING
STATE OF WISCONSIN

PUBLIC NOTICE is hereby given to all persons in the County of Chippewa, Wisconsin, that a public hearing will be held on **May 19, 2022** beginning at **4:30 PM** at the Chippewa County Courthouse, Room 302, 711 N Bridge Street, Chippewa Falls, Wisconsin relative to the following request:

Rezone Petition: 2022-0005
Petitioners: Michael & Debra Dresel
The westerly 33' of a vacated road, which is located easterly of Certified Survey Map 5188 and easterly of Lots 1-6, Block 8 of the Jim Falls Inc Plat (Referred to as the "Eau Claire Realty Co. Plat number 6139). The platted-unimproved road was identified as "Cypreansen" Street and is located in the NE ¼ of the NE ¼, Section 31, Township 30 North, Range 07 West, Town of Anson.
From: Residential 3 **To:** Agricultural

Conditional Use Petition: 2022-0004
Petitioner: Confidential Records Inc **Agent:** Chad Barlett
Property Owner: Yakesh Properties, LLC
To allow a paper recycling facility (Confidential Records Inc) in the Highway Commercial District in accordance with sections 70-73(b)(9) and 70-108 of the Chippewa County Zoning Ordinance on Lot 13, Certified Survey Map 4803 (Parcel Number 22810-2342-74803013), which is located in the NW ¼ of the SE ¼, Section 23, Township 28 North, Range 10 West. Town of Wheaton. Physical Address: 3273 56th Street.

Conditional Use Petition: 2022-0006
Petitioner: OCC LLC **Agent:** Joel Walter
To create a man-made pond in the Local Commercial District in accordance with section 70-72(b)(5) and 70-108 of the Chippewa County Zoning Ordinance and section 55-18(c)(4) of the Chippewa County Shoreland Ordinance on Lot 3, Certified Survey Map 4784 (Parcel Number 22908-1714-7478403). This parcel is located in the SE ¼ of the NE ¼, Section 17, Township 29 North, Range 08 West. Town of Eagle Point. Physical Address: Vacant land.

Specific information regarding these public hearings can be obtained at the Chippewa County Department of Planning & Zoning. All persons interested are invited to attend this hearing.

Dated this **28th** day of **April**, 2022

Douglas Clary, Director
Department of Planning & Zoning
Chippewa County

Attachment: 2022-0004 Confidential Reccords Inc - Public Notice & Maps (6958 : 2022-0004 - Confidential Records - CUP)

CHIPPEWA COUNTY
DEPARTMENT OF PLANNING & ZONING

• 711 North Bridge Street, Chippewa Falls, WI 54729 • Phone:715.726.7940 • Fax:715.726.4596 • www.co.chippewa.wi.us •

Land Management | Land Planning | Land Records & G.I.S. | POWTS & Wells

Date: April 28, 2022

To: Property Owner(s)

From: Douglas Clary, Director Douglas Clary

Re: Public Meetings & Hearing

Dear Property Owner(s):

The Chippewa County Department of Planning & Zoning has received a conditional use petition on a parcel of land that is located either adjacent to or in the vicinity of property owned by you. You are receiving this notice because your property has been determined to be within the legal public hearing notification distance per county and state requirements. I have enclosed a map identifying the location of the parcel associated with this conditional use petition. If you have any questions regarding this conditional use petition, please contact me at (715) 726-7941.

CONDITIONAL USE PETITION #2022-0004
Petitioner: Confidential Records Inc **Agent:** Chad Bartlett
Property Owner: Yakesh Properties, LLC
To allow a paper recycling facility (Confidential Records Inc) in the Highway Commercial District in accordance with sections 70-73(b)(9) and 70-108 of the Chippewa County Zoning Ordinance on Lot 13, Certified Survey Map 4803 (Parcel Number 22810-2342-74803013), which is located in the NW ¼ of the SE ¼, Section 23, Township 28 North, Range 10 West. Town of Wheaton. Physical Address: 3273 56th Street.

The Wheaton Parks and Planning Commission will **REVIEW** this request on **May 3, 2022** at **7:00 PM**, at the Wheaton Town Hall, 4975 County Highway T, Chippewa Falls, Wisconsin 54729. The Parks and Planning Commission will forward an **ADVISORY** recommendation to the Wheaton Town Board to approve, disapprove or approve with modification(s) and/or condition(s).

The Wheaton Town Board will **REVIEW** this request on **May 10, 2022** at **7:00 PM,** at the Wheaton Town Hall, 4975 County Highway T, Chippewa Falls, Wisconsin 54729. The Town Board will forward an **ADVISORY** recommendation to the Chippewa County Planning & Zoning Committee to approve, disapprove or approve with modification(s) and/or condition(s).

The Chippewa County Planning & Zoning Committee will hold a **PUBLIC HEARING** on **May 19, 2022** at **4:30 PM**. The Committee will make a final determination to approve, disapprove or approve with modification(s) and/or conditions.

Attachment: 2022-0004 Confidential Reccords Inc - Public Notice & Maps (6958 : 2022-0004 - Confidential Records - CUP)

2022-0004 Yakesh Properties, LLC - (Confindential Records, Inc.)
Conditional Use Request - Location Map

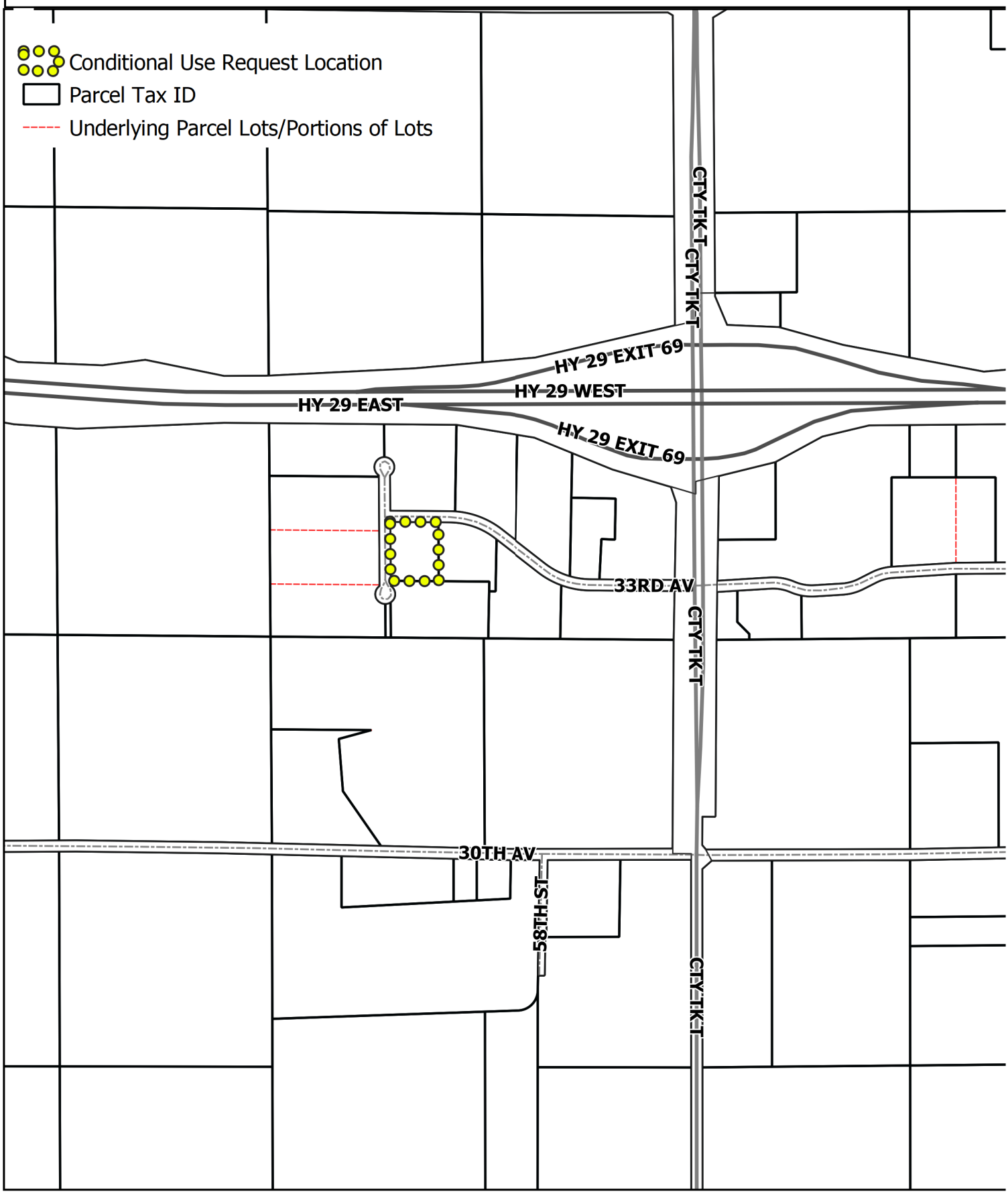

Produced on April 28, 2022 by the Chippewa County Department of Planning & Zoning and is for reference purposes only.

Attachment: 2022-0004 Confidential Reccords Inc - Public Notice & Maps (6958 : 2022-0004 - Confidential Records - CUP)

2022-0004 Yakesh Properties, LLC - (Confindential Records, Inc.)
Conditional Use Request - Aerial (2020)

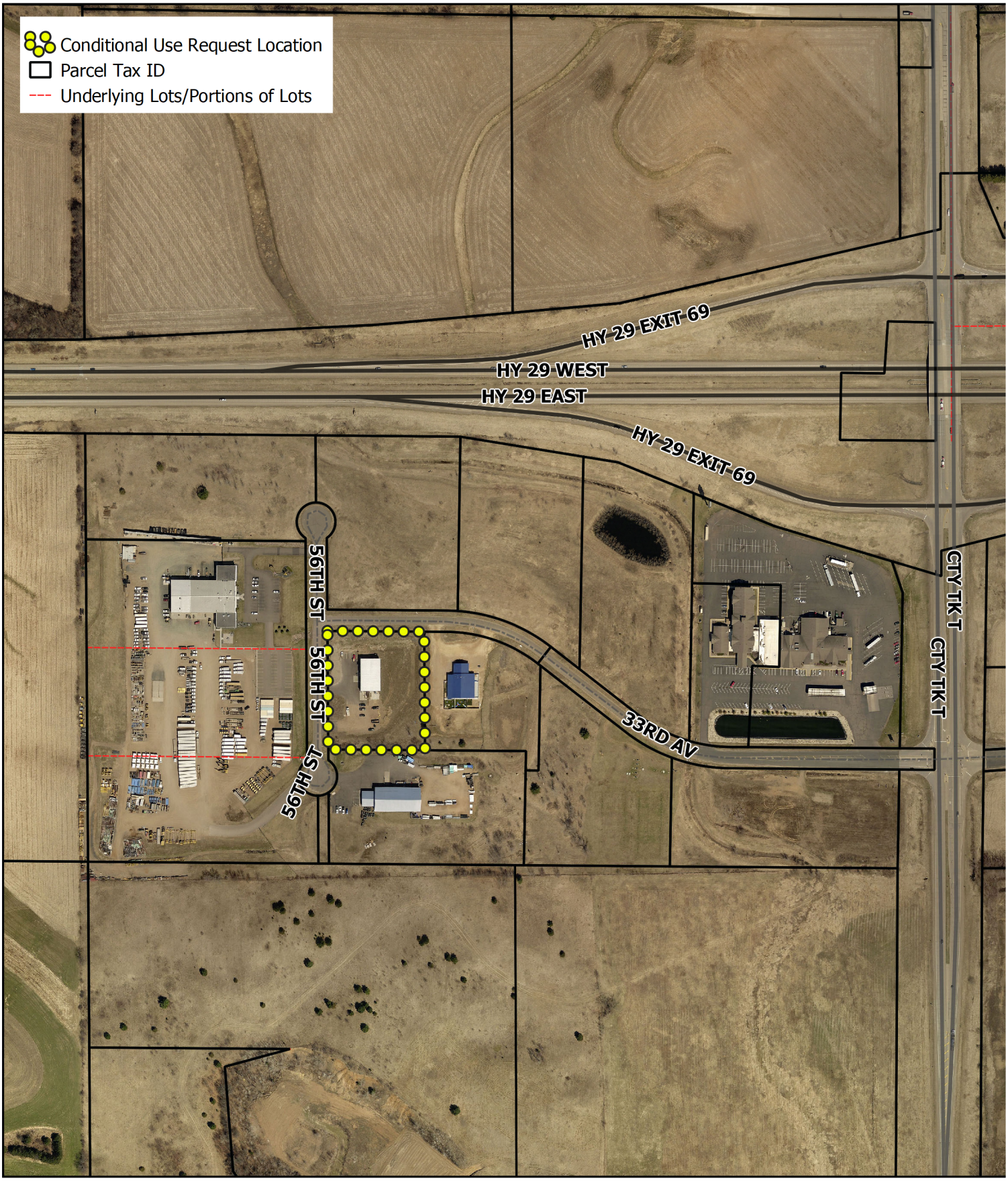

Produced on April 28, 2022 by the Chippewa County Department of Planning & Zoning and is for reference purposes only.

Attachment: 2022-0004 Confidential Reccords Inc - Public Notice & Maps (6958 : 2022-0004 - Confidential Records - CUP)

2022-0004 Yakesh Properties, LLC - (Confindential Records, Inc.)
Conditional Use Request - Zoning Districts

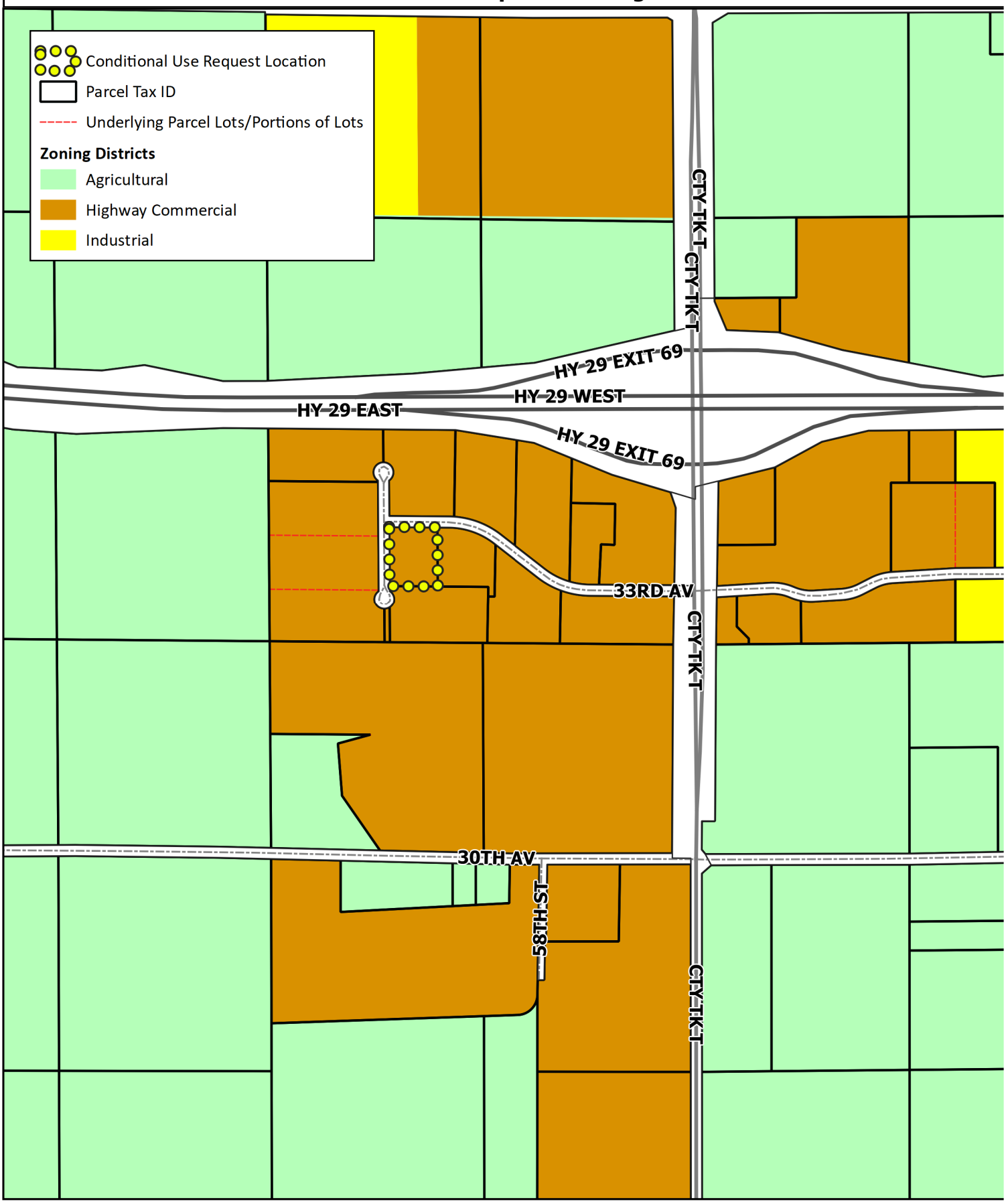

Produced on April 28, 2022 by the Chippewa County Department of Planning & Zoning and is for reference purposes only

Attachment: 2022-0004 Confidential Reccords Inc - Public Notice & Maps (6958 : 2022-0004 - Confidential Records - CUP)

Chadb@Confidentialrecordsinc.com
cell # 715-308-4030

CONFIDENTIAL Records INC.
N7707 610th Street
Colfax, WI 54730
ConfidentialRecordsInc.com

April 19th, 2022

Chippewa County Planning and Zoning
Attn: Doug Clary, Director
711 N Bridge Street
Chippewa Falls, WI 54729

RECEIVED
APR 19 2022
BY:

RE: Conditional Use Permit Application

Dear Mr. Clary.

Confidential Records, Inc. is applying for a conditional use permit for the building property with address 3273 56th Street, Eau Claire, WI 54703 located in the Town of Wheaton. The building property is owned by Yakesh Properties LLC, Bryon Yakesh with address of 4109 Meadow Lane, Eau Claire, WI 54701.

The building property is currently zoned within a Highway Commercial District and Confidential Records, Inc. is requesting to use the building property as a paper recycling facility. Which is a conditional use of the property within the Highway Commercial District 70.73 (b) (9), Resource Recovery Facility.

Confidential Records, Inc. plans to lease the building for (3) years initially with an option to continue leasing. Lease to begin June 1st, 2022. The building was constructed in 2018. It is approved to meet the current state codes for construction, site plan, storm water runoff collection, driveway entrance/exit. Included is a letter from Bryon Yakesh acknowledging our intent for use of the building.

Confidential Records, Inc. operates mobile shredding trucks, which will be unloaded inside of building. The shredded paper will be conveyed into an auto tie baler. Paper bales will be produced and stored inside the building until loaded onto semitrailers bound for paper mills to be recycled. We anticipate loading (2) semitrailers per week out of this facility. No paper bales will be stored outside.
A dust collection system will be installed at the point of unloading with an enclosure unit. Hours of operation will be 6 am to 7 pm. The site will be used immediately upon installation of baling equipment for an indefinite period. Confidential Records, Inc. acknowledges the use is conditional and binding upon applicant, successors, assigns and personal representatives and is a restriction that runs with the land.

If you or the Chippewa County Planning and Zoning Committee need further clarification or have questions, please contact me at (715) 235-4728.

Sincerely,

Chad Bartlett, Owner
Confidential Records, Inc.

Attachment: 2022-0004 Confidential Reccords Inc - Submitted Information (6958 : 2022-0004 - Confidential Records - CUP)

Attachments

1. Building Property site layout
2. Yakesh Properties acknowledgement letter
3. Conceptual layout of equipment
4. Picture of Baler
5. Picture of Dust Enclosure
6. Filtration system

Attachment: 2022-0004 Confidential Reccords Inc - Submitted Information (6958 : 2022-0004 - Confidential Records - CUP)

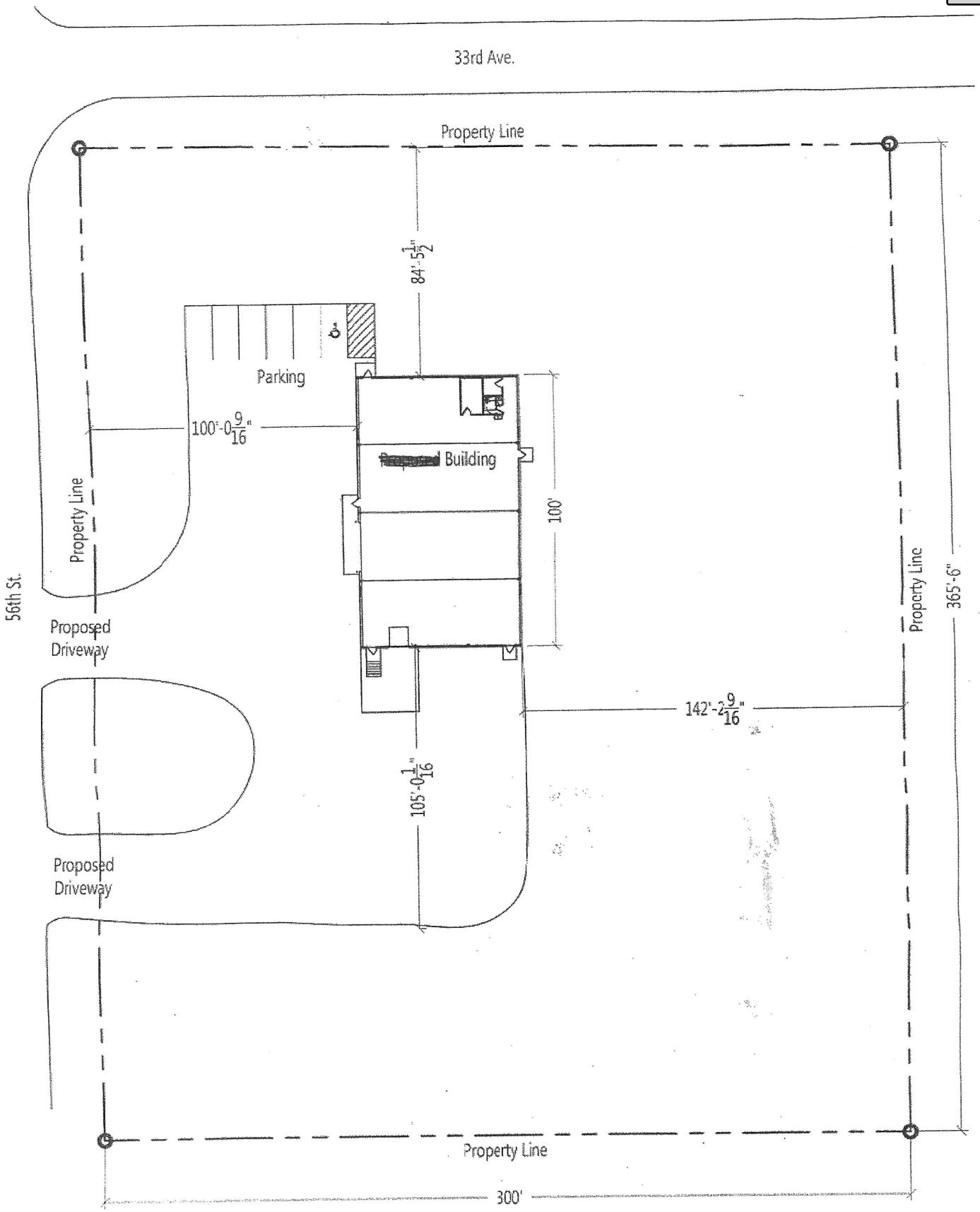

SITE PLAN

Scale: 1"=40'

Job Location:
Corner of 56th St. and 33rd Ave.
Wheaton, WI
Town of Wheaton
Chippewa County

Attachment: 2022-0004 Confidential Reccords Inc - Submitted Information (6958 : 2022-0004 - Confidential Records - CUP)

CONFIDENTIAL RECORDS

VILLACO, INC

SCALE: 1"=10'

DATE: 4-13-2022

DRAWING NO.

THIS DRAWING AND ANY DESIGN, DEVELOPMENT, INVENTION, OR COPYRIGHT WHICH IT MAY REPRESENT ARE THE SOLE PROPERTY OF VILLACO, INC. THIS DRAWING MAY NOT BE COPIED IN WHOLE OR PART, OR ANY SUBJECT MATTER SHOWN HEREIN BE MANUFACTURED, WITHOUT THE PRIOR EXPRESS WRITTEN CONSENT FROM AN AUTHORIZED AGENT OF VILLACO, INC.

YAKESH PROPERTIES, LLC
STATEMENT

DATE: March 28, 2022

MAILING ADDRESS:
Yakesh Properties, LLC
Bryon Yakesh, owner.
4109 Meadow Lane
Eau Claire, WI 54701

PROPERTY LOCATION:
3273 56th St.
Eau Claire, WI 54703

To Town of Wheaton,

I plan on leasing my building at 3273 56th St. to Confidential Records, Inc. (owner Chad Bartlett) starting on June 1, 2022. Yakesh Properties, LLC understands that Confidential Records will use the building for office personnel, paper bailing operation, & parking of shredding trucks.

I have no issues or concerns with the use of the building by Confidential Records, Inc. Chad Bartlett has been a successful entrepreneur for many years & is a great addition to the Wheaton Industrial Park.

Thank you for your time.

Sincerely,

Bryon Yakesh

Bryon Yakesh, owner
Yakesh Properties, LLC

Attachment: 2022-0004 Confidential Reccords Inc - Submitted Information (6958 : 2022-0004 - Confidential Records - CUP)

Attachment: 2022-0004 Confidential Reccords Inc - Submitted Information (6958 : 2022-0004 - Confidential Records - CUP)

VILLACO, INC.
1050 Corporate Drive, Slinger, WI 53086
TEL: (262) 644-6607 - FAX: (262) 644-0660
E-mail: ryan@villaco.com - www.villaco.com

Chad Bartlett

April 13, 2022

Confidential Records

Dear Chad,

Subject: Dust Filter System

In accordance with your request, Villaco, Inc. is pleased to submit the following budgetary proposal for the subject equipment:

The Nederman Advantage

Your S-Series enclosureless unit has a number of different features:

Ideal for single cell manufacturing, high speed routing, sawing, cutting, or as an after-filter.

Safe, simple setup - Raise the bag section, fasten nuts and bolts, attach ducting, plug it in, and turn it on. Mobility - Unit comes palletized to move from cell to cell or cells or depalletized for permanent placement. Attached fan offers quiet operation at 1,750 rpm and emits less than 70 dBA at 10 ft.

Multiple dust collection options for easy disposal including bags, drums, or high capacity dump bins Patented Nederman Superbag filter bags are 99.9% efficient

Small footprint ~ 7 to 9 ft wide x 4 ft deep

Meets NFPA 664 (2017), Standard for the Prevention of Fires and Explosions in Wood Processing and Woodworking Facilities, 3.3.12.2 and 8.2.2.6.1.6 (7) for a system with a maximum air flow-handling capacity of 5,000 cfm and complies with the following verbiage:

3.3.12.2 - Enclosureless AMS (air-material separator). An AMS designed to separate the conveying air from the material being conveyed where the filter media is not enclosed or in a container.

8.2.2.6.1.6 * - Dust collectors shall be located in accordance with one of the following:

(7) * Indoors for enclosureless dust collectors meeting all of the following criteria:

(a) The collector is used only for dust pickup from wood processing machinery (i.e., no metal

(b) The collector is not used on sanders, molders, or abrasive planers having mechanical material feeds through the machine

(c) Each collector has a maximum air-handling capacity of 2.36 m3/sec (5000 cfm).

Attachment: 2022-0004 Confidential Reccords Inc - Submitted Information (6958 : 2022-0004 - Confidential Records - CUP)

(d) The fan motor is of a totally enclosed, fan-cooled design.

(e) The collected dust is removed daily or more frequently if necessary to ensure efficient

(f) The collector is located at least 6.1 m (20 ft) from any means of egress or area routinely occupied by personnel.

(g) Multiple collectors in the same room are separated from each other by at least 6.1 m (20 ft).

Attachment: 2022-0004 Confidential Reccords Inc - Submitted Information (6958 : 2022-0004 - Confidential Records - CUP)

S-Series Unit Specs

	S-1000
CFM range	
	4,000 CFM @ 8.0" w.g.
	5,000 CFM (MAX) @ 7.0" w.g.
Phase / Voltage	
	3PH 208-230/460V
	3PH 575V
Power (hp)	10.0 (7.5 Kw)
Fan RPM	1,750
Impeller	Steel or Aluminum
Fan flange (w/ bolt holes)	400 mm
Fange flange to QF or RAW OD	10" to 16" Ø
# of filter elements	24
Filter media area (ft^2)	360
Height	10' - 10"
Width	8' - 9"
Depth	4' - 2"
Collection options	45 gal, 8 mil, clear, plastic bags
	42 gal drums, sight glass, and handles
	230 gal dump bin with safety chain
Estimated shipping weight range* (lbs)	1,350 to 2,000

*** Based on one (1) unit with collection device and duct transition**

Attachment: 2022-0004 Confidential Reccords Inc - Submitted Information (6958 : 2022-0004 - Confidential Records - CUP)

How the S-Series Works (Model S-500 with collection bags shown)

During normal operation

1. During normal operation, the dust laden air from the plant travels down the supply duct (1)

2. The dirty air then enters the Nederman material handling fan (2)

3. The dust then enters the hopper section (5) of the filter

4. Air slows down in the hopper and heavier dust particles fall down into the inside of the collection bags (6)

5. The remaining dust then travels up into the inside of the filter bags (4)

6. The air, which originated from the plant, is now clean and passes through the filter bag into the surrounding atmosphere (3)

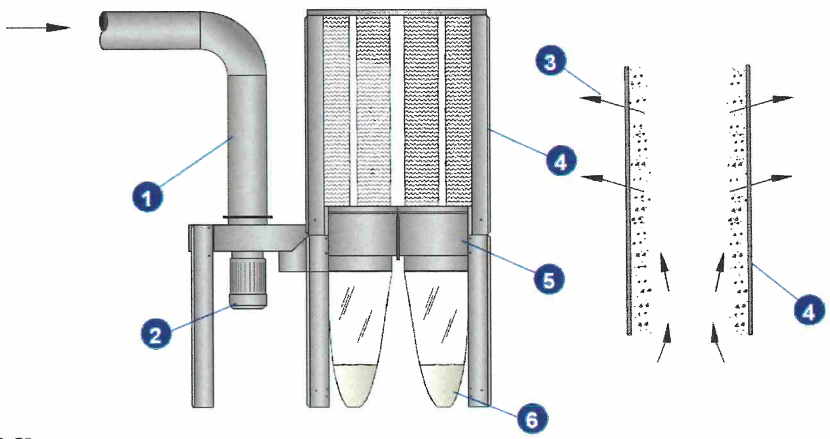

While cleaning

1. The S Series may only clean "off-line", when the Nederman fan (2) has stopped rotating

2. The S Series is cleaned by applying physical force to the outside of the filter bag (4) which, in effect, shakes t

3. The dust cake, which hangs on the inside of the filter bag, falls into the hopper section and then into the collection bags (6) below

Attachment: 2022-0004 Confidential Reccords Inc - Submitted Information (6958 : 2022-0004 - Confidential Records - CUP)

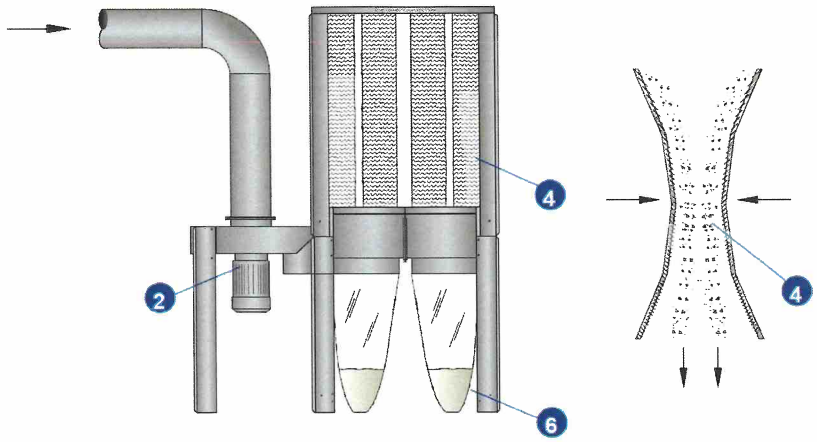

THE FOLLOWING IS A SUMMARY AND PRICING OF THE POTENTIAL S-SERIES UNIT(S) BEING PURCHASED:

UNIT 3 - S-1000 - 3PH - 460V - BAGS - STEEL IMPELLER - 16" Ø QF

S-1000 unit and fan	(1) S-1000 - 10HP, 3PH, 208-230/460V, Steel Impeller
Motor starter	(1) S-1000 - MS - 10HP, 3PH, 460V, NEMA 4/12, Push Button
Fan inlet adaptor	(1) S-1000 - Fan flange to 16" Ø QF
Collection containers	(1) Set of 3 - 45 gal, 8 mil, clear, plastic bags w/ clamps (standard)
Required duct	Included

Additional Equipment

Total price for unit quoted above $ $13,900

Freight and installation to be part of system total installation price

Freight Prepay and Add

Sincerely,

Ryan Villarreal

Ryan Villarreal
Villaco, Inc.

Accepted by: _____

Purchase Order #: _____

Date: _____

Attachment: 2022-0004 Confidential Reccords Inc - Submitted Information (6958 : 2022-0004 - Confidential Records - CUP)

STATEMENT OF EXPLANATION
2022-0005 - MICHEAL DRESEL - REZONE - TOWN OF ANSON

The westerly 33' of a vacated road, which is located easterly of Certified Survey Map 5188 and easterly of Lots 1-6, Block 8 of Jim Falls Inc Plat (Referred to as the "Eau Claire Realty Co. Plat number 6139) The platted unimproved road was identified as "Cypreansen" Street and is located in the NE 1/4 of the NE 1/4, Section 31, Township 30 North, Range 07 West. Town of Anson.

From: Residential 3 **To:** Agricultural

(Publish – Chippewa Herald – May 5 and May 12, 2022)

CHIPPEWA COUNTY PLANNING & ZONING COMMITTEE
NOTICE OF PUBLIC HEARING
STATE OF WISCONSIN

PUBLIC NOTICE is hereby given to all persons in the County of Chippewa, Wisconsin, that a public hearing will be held on **May 19, 2022** beginning at **4:30 PM** at the Chippewa County Courthouse, Room 302, 711 N Bridge Street, Chippewa Falls, Wisconsin relative to the following request:

Rezone Petition: 2022-0005
Petitioners: Michael & Debra Dresel
The westerly 33' of a vacated road, which is located easterly of Certified Survey Map 5188 and easterly of Lots 1-6, Block 8 of the Jim Falls Inc Plat (Referred to as the "Eau Claire Realty Co. Plat number 6139). The platted-unimproved road was identified as "Cypreansen" Street and is located in the NE ¼ of the NE ¼, Section 31, Township 30 North, Range 07 West, Town of Anson.
From: Residential 3 **To:** Agricultural

Conditional Use Petition: 2022-0004
Petitioner: Confidential Records Inc **Agent:** Chad Barlett
Property Owner: Yakesh Properties, LLC
To allow a paper recycling facility (Confidential Records Inc) in the Highway Commercial District in accordance with sections 70-73(b)(9) and 70-108 of the Chippewa County Zoning Ordinance on Lot 13, Certified Survey Map 4803 (Parcel Number 22810-2342-74803013), which is located in the NW ¼ of the SE ¼, Section 23, Township 28 North, Range 10 West. Town of Wheaton. Physical Address: 3273 56th Street.

Conditional Use Petition: 2022-0006
Petitioner: OCC LLC **Agent:** Joel Walter
To create a man-made pond in the Local Commercial District in accordance with section 70-72(b)(5) and 70-108 of the Chippewa County Zoning Ordinance and section 55-18(c)(4) of the Chippewa County Shoreland Ordinance on Lot 3, Certified Survey Map 4784 (Parcel Number 22908-1714-7478403). This parcel is located in the SE ¼ of the NE ¼, Section 17, Township 29 North, Range 08 West. Town of Eagle Point. Physical Address: Vacant land.

Specific information regarding these public hearings can be obtained at the Chippewa County Department of Planning & Zoning. All persons interested are invited to attend this hearing.

Dated this **28th** day of **April**, 2022

Douglas Clary, Director
Department of Planning & Zoning
Chippewa County

Attachment: 2022-0005 Dresel - Rezone - Public Hearing Notices & Maps (6959 : 2022-0005 - Micheal Dresel - Rezone)

CHIPPEWA COUNTY
DEPARTMENT OF PLANNING & ZONING

• 711 North Bridge Street, Chippewa Falls, WI 54729 • Phone:715.726.7940 • Fax:715.726.4596 • www.co.chippewa.wi.us •

Land Management | Land Planning | Land Records & G.I.S. | POWTS & Wells

Date: April 28, 2022

To: Property Owner(s)

From: Douglas Clary, Director Douglas Clary

Re: Public Meetings & Hearing

Dear Property Owner(s):

The Chippewa County Department of Planning & Zoning has received a rezone petition on a parcel of land that is located either adjacent to or in the vicinity of property owned by you. You are receiving this notice because your property has been determined to be within the legal public hearing notification distance per county and state requirements. I have enclosed a map identifying the location of the parcel associated with this rezone petition. If you have any questions regarding this petition, please contact me at (715) 726-7941.

Rezone Petition: 2022-0005
Petitioners: Michael & Debra Dresel
The westerly 33' of a vacated road, which is located easterly of Certified Survey Map 5188 and easterly of Lots 1-6, Block 8 of the Jim Falls Inc Plat (Referred to as the "Eau Claire Realty Co. Plat number 6139). The platted-unimproved road was identified as "Cypreansen" Street and is located in the NE ¼ of the NE ¼, Section 31, Township 30 North, Range 07 West, Town of Anson.
From: Residential 3 **To:** Agricultural

Anson Town Board
The Anson Town Board will **REVIEW** this request on **May 12, 2022** at **7:30 PM,** at the Anson Town Hall, 13836 County Highway S South, Jim Falls, Wisconsin 54728. The Town Board will forward an **ADVISORY** recommendation to the Chippewa County Planning & Zoning Committee to approve, disapprove or approve with modification(s) and/or condition(s).

Chippewa County Planning & Zoning Committee
The Chippewa County Planning & Zoning Committee will hold a **PUBLIC HEARING** on **May 19, 2022** at **4:30 PM**. The Committee will make a final determination to approve or disapprove of the rezone petition. The Committee will make a determination on the petition to approve, disapprove or approve with modification(s) and/or conditions. If the Planning & Zoning Committee approves or approves with modification, the petition will be forwarded to the County Board meeting on **June 14** at **6:00 PM** for their consideration. If the Planning & Zoning Committee disapproves, the petition will fail.

Attachment: 2022-0005 Dresel - Rezone - Public Hearing Notices & Maps (6959 : 2022-0005 - Micheal Dresel - Rezone)

2022-0005 Dresel - Rezone - Location Map

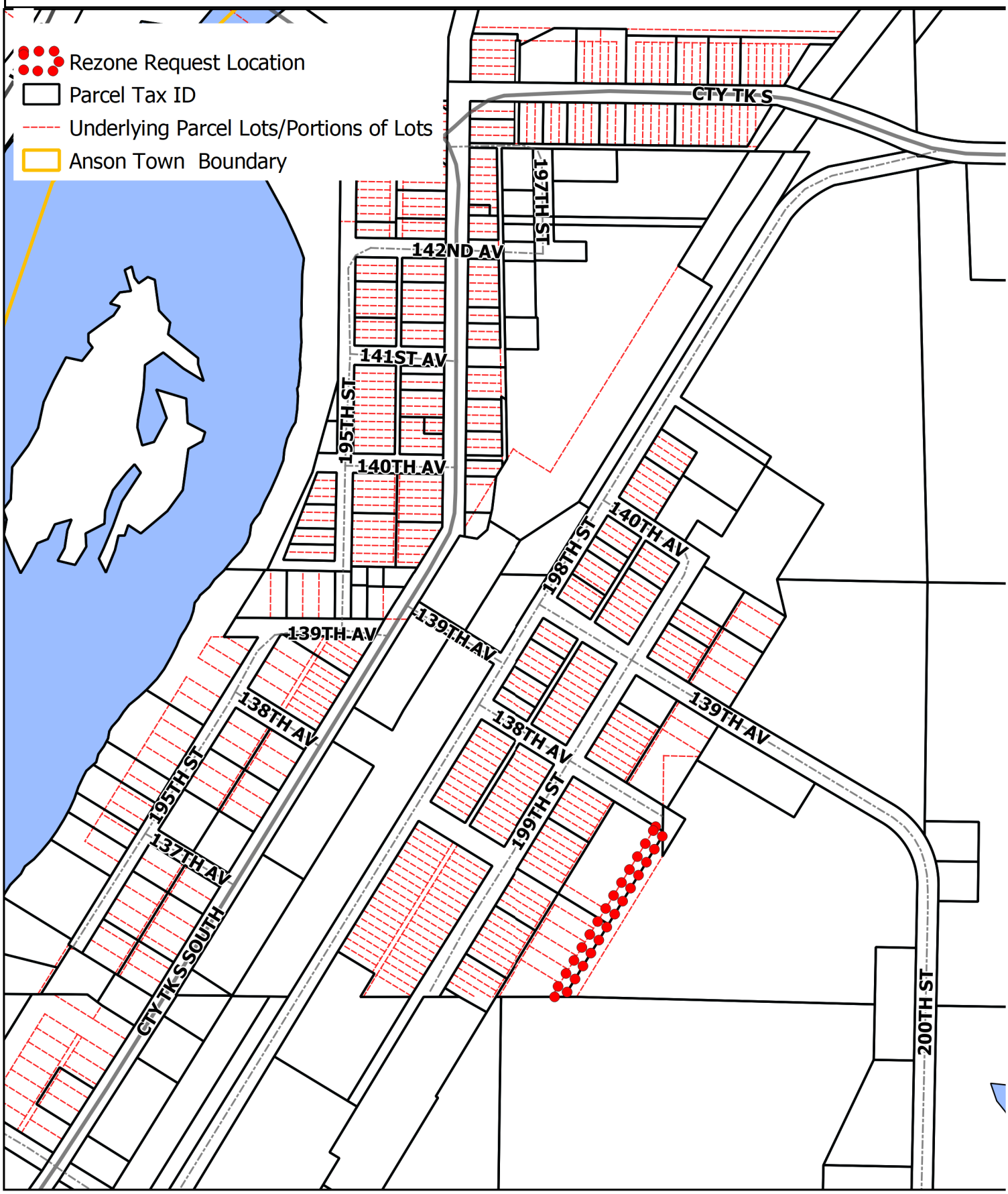

Produced on April 29, 2022 by the Chippewa County Department of Planning & Zoning and is for reference purposes only.

Attachment: 2022-0005 Dresel - Rezone - Public Hearing Notices & Maps (6959 : 2022-0005 - Micheal Dresel - Rezone)

2022-0005 Dresel - Rezone - Aerial (2020)

Produced on April 29, 2022 by the Chippewa County Department of Planning & Zoning and is for reference purposes only.

Attachment: 2022-0005 Dresel - Rezone - Public Hearing Notices & Maps (6959 : 2022-0005 - Micheal Dresel - Rezone)

2022-0005 Dresel - Rezone - Zoning Districts

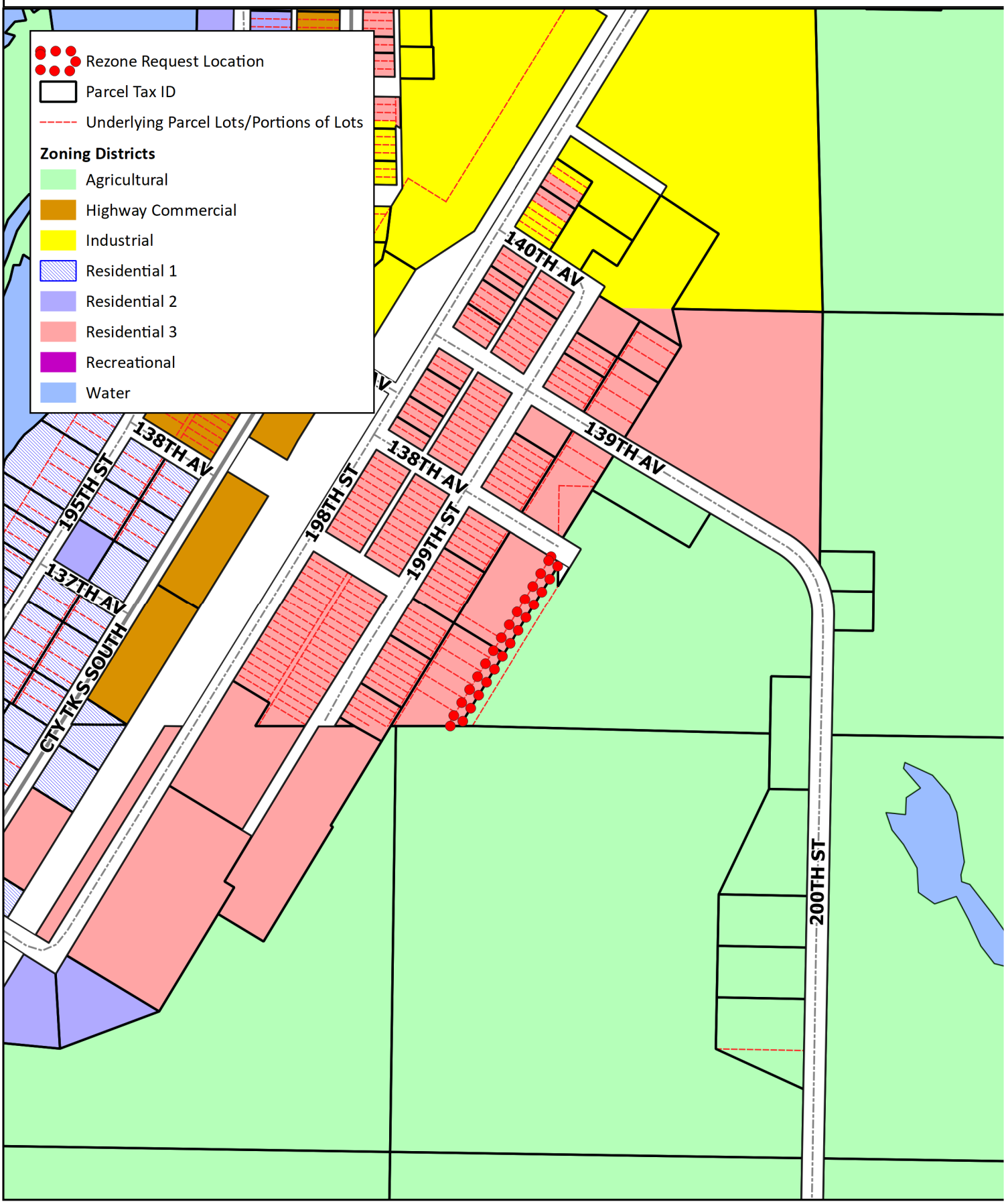

Produced on April 29, 2022 by the Chippewa County Department of Planning & Zoning and is for reference purposes only

Attachment: 2022-0005 Dresel - Rezone - Public Hearing Notices & Maps (6959 : 2022-0005 - Micheal Dresel - Rezone)

CHIPPEWA COUNTY
DEPARTMENT OF PLANNING & ZONING
• 711 North Bridge Street, Chippewa Falls, WI 54729 • Phone:715.726.7940 • Fax:715.726.4596 • www.co.chippewa.wi.us •

2022 Rezone Application

Comprehensive zoning consists of written text (commonly referred to as the zoning ordinance) and an official zoning map. The zoning ordinance is a guideline for permitted and conditional uses, which are separated into zoning classifications or districts. The zoning map shows how a town board has designated the particular zoning classifications or districts to parcels of land within their particular jurisdiction. A **REZONE** is where a property owner or other authorized entity seeks to amend the official zoning map, which would allow a use that is currently not permitted on the parcels of land based on the existing zoning classification or district. This is referred to as a zoning map amendment or "rezoning". The requested rezoning change may not be granted if it does not fit with the comprehensive plan and community goals for the respective town and county.

SECTION I: Parcel Owner Information			SECTION II: Agent Information		
Name: Michael C Dresel			Name:		
Mailing Address: 19927 138th Ave			Mailing Address:		
City: Jim Falls	State: WI	Zip: 54748	City:	State:	Zip:
Telephone: 715-828-1164			Telephone:		
Email Address (Required): M_dresel54748@yahoo.com			Email Address (Required):		

SECTION III: Parcel Information			
Town of: Anson		Property Address: 19927 138th Ave	
Parcel Number(s): 23007-3111-75188001 Portions of: 23007-3111-6139080)		City: Jim Falls	State: WI / Zip: 54748
Existing Zoning District(s): R3 &		Proposed Zoning District(s): Ag	

only the vacated R.O.W that has been Attached to these two parcels on the eastern side.

GENERAL DIRECTIONS:

1. **Complete** this Application form and the required four (4) parts:
   - ☐ Part 1: General Questions related to the request
   - ☐ Part 2: Planning & Zoning Committee Schedule - 2022
   - ☐ Part 3: General Rezoning Process
   - ☐ Part 4: Applicant Acknowledgement/Signature
2. **Submit** the completed application, all required information and a **$350.00** public hearing fee (Make check payable to: Chippewa County Treasurer) by the deadline (as listed in Part 2) to the Chippewa County Department of Planning & Zoning, Room 009, 711 N. Bridge Street, Chippewa Falls, Wisconsin 54729.
3. **Make arrangements** to attend or have a representative attend any local town plan commission or town board meetings, and the required Planning & Zoning public hearing. This presence is needed so that questions can be answered and concerns addressed.

FOR DEPARTMENT OF PLANNING & ZONING STAFF USE:		
Receipt Number: 19835	Appeal Number: ~~22002~~ 2022-0005	Public Hearing Date: 05/19/22

Attachment: 2022-0005 Dresel - Rezone - Application (6959 : 2022-0005 - Micheal Dresel - Rezone)

Once the completed application is received, the Department will prepare a public hearing notice and publish it within the Chippewa Herald. The public hearing notice will include the location and time of the required public hearing before the Chippewa County Planning & Zoning Committee. In addition, your neighbors, the Town Board and any appropriate county or state agencies will be notified. At the public hearing, any party may appear in person or may be represented by an agent or attorney to present information to the Planning & Zoning Committee in support or opposition of the rezone request.

Part 1: General Questions. Please use a separate 8.5" x 11" sheet to answer these questions.

1. As the applicant, do you have legal title to the parcel(s)? If you **do not** have legal title to the property, please have the property owner sign this application.
2. Identify the parcel(s) that are or will be part of this rezone request. If needed, an additional sheet listing those parcels can be attached.
3. Describe the present and, if known, any proposed improvements on each parcel of land.
4. Explain why you are requesting to rezone of each parcel. Please identify the proposed use of each parcel.
5. Explain the compatibility of your proposed use(s) with the existing use(s) on adjacent parcels and those in the vicinity of this parcel(s).
6. Discuss any additional issues you feel that supports the consistency of your proposed use with County ordinances and plans as well as any Town ordinances or plans.

Be prepared to give a detailed presentation when called upon at the public hearing before the Planning and Zoning Committee. Prepare an outline of your proposal, something similar to a "business plan", detailing for the Planning & Zoning Committee your proposal. Include any documentation you feel is necessary as part of your presentation in defining your proposal for the Committee and possibly the County Board. It is vital to your application to consult with professionals you feel may be able to assist with your application (i.e. surveyor, attorney, engineer, etc.)

Part 2: Planning & Zoning Committee Schedule - 2022

Applications will not be placed on the appropriate agenda unless they are properly completed and include **ALL** required supporting information or documents **and** payment of the public hearing fee. Applicants are encouraged to consult with staff of the Department of Planning & Zoning prior to the filing of the application. This is an important step to insure that all pertinent issues are identified and to determine what information in addition to the application forms might be necessary in order for the department to accept and process your application. Please CIRCLE or HIGHLIGHT the meeting you intend on attending:

Application Deadline: 12:00 Noon	Public Hearing
December 22, 2021	January 20, 2022
January 27, 2022	February 24, 2022
February 24, 2022	March 24, 2022
Due to the County Board Reorganization, the April meeting will not occur.	
April 21, 2022	May 19, 2022
May 26, 2022	June 23, 2022
June 23, 2022	July 21, 2022
July 21, 2022	August 18, 2022
August 25, 2022	September 22, 2022
September 22, 2022	October 20, 2022
October 20, 2022	November 17, 2022
November 17, 2022	December 15, 2022

*Note: Applications and all supporting information are due at **12:00 Noon** on the designated date.*
Note: Typically, the Planning & Zoning Committee meetings start at 4:30 PM on the designated dates above.
Note: Deadlines, public hearing dates and times after April 1st are subject to change due to the County Board Reorganization.

Part 3: General Rezoning Process:

(A) The rezone application is filed with the Department of Planning & Zoning. This includes the legal description of the parcels to be rezoned, a written statement addressing the questions as listed in Part 1 and any other information your feel will aid in a decision on this request.

Attachment: 2022-0005 Dresel - Rezone - Application (6959 : 2022-0005 - Micheal Dresel - Rezone)

(B) The Town Board will be notified of the rezone application. The Town Board can recommend approval or denial of a rezoning request. If the Town Board denies a rezone request, the Planning & Zoning Committee can only recommend an approval with modification to the rezone request or deny the rezone request.

(C) A Class 2 Public Hearing Notice will be published in the Chippewa Herald detailing the request and the date and time of the Public Hearing.

(D) Property owners of the land and those property owners within 400' (or maybe a greater distance) of the requested rezone change are notified directly by mail as well as the Town Board Chair and Town Clerk. The notice to the property owners will generally contain a portion of the public hearing notice and information pertaining to meetings to be held at the Town level (plan commission, town board, etc) as well as the Public Hearing in front of the Planning & Zoning Committee.

(E) General maps (location map, aerial view and existing zoning districts map) will be prepared for the request by the Department.

(F) A department staff report is prepared and sent to the Planning & Zoning Committee, while comments from the general public are solicited.

(G) Following the Public Hearing, the Planning & Zoning Committee will make a motion to either approve, approve with modification or deny the rezoning request. If the rezone request receives an approval or approval with modification an ordinance amendment will be prepared and placed on the next County Board meeting agenda for their approval.

(H) If the County Board approves the rezone and the town board files an objection to the approval, the town board will then have 45 days to veto the rezone request following the applicable state statutes.

(I) If the rezone request receives County Board approval, the final step is the publication of the amendment in the Chippewa Herald. Once published, the zoning district amendment takes effect. The entire process from application deadline to final publication can take two months or more to complete depending upon the scheduling of hearing dates.

Part 4: Applicant Acknowledgement/Signature

This application must be signed by the property owner or in case of an agreement to purchase the property, a letter from the property owner acknowledging the potential buyer is seeking the rezone.

- I certify that the information I have provided in this application is true, accurate and complete.
- I or a representative will have an opportunity to present to the Planning & Zoning Committee information in favor of this request.
- I have the authority to allow the staff of the Department of Planning & Zoning and Planning & Zoning Committee member's access to the property to conduct necessary inspections related to this request.
- I understand that I cannot speak to any member of the Planning & Zoning Committee about this application, except at the public hearing.
- I understand that I cannot direct any written communication about this application to a member of the Planning & Zoning Committee, unless I also file a copy with the Department of Planning & Zoning and direct additional copies to each person who has registered an interest in this application.
- I also understand that if I or my representative fail to appear in front of the Planning & Zoning Committee during the designated public hearing or my failure to observe the above mentioned rules, my request may be **DENIED**.

Signed: Michael C Dresel Date: March 31 - 2022
Owner/Agent

Part 5: Planning & Zoning Department Mailing List

Applicant
Property Owner Owners within 400'
Planning & Zoning Committee Members
Town Board Chair & Clerk
County Board Supervisor
News Media
Others
Wisconsin DNR
US Army Corp of Engineers
Wisconsin DOT

Attachment: 2022-0005 Dresel - Rezone - Application (6959 : 2022-0005 - Micheal Dresel - Rezone)

Doug Clary

From: Mike Dresel <m_dresel54748@yahoo.com>
Sent: Thursday, March 31, 2022 1:14 PM
To: Doug Clary
Cc: Doug Clary
Subject: [EXTERNAL] Rezone Property For Mike Dresel Jim Falls

********** [CAUTION - EXTERNAL EMAIL] DO NOT reply, click links, or open attachments unless you have verified the sender and know the content is safe **********

Part 1: General Questions March 31 2022

1 Yes I have legal title to property.

2 Parcel A 23007-3111-61390801 is zoned R-3

Parcel B 23007-3111-75188001 is zoned R-3

Farm 23007-3111-05000000 is zoned AG

3 None

4 Would like to build a new duplex on parcel A
plus clean up zoning from R-3 to AG turn back to farm.

5 Build new duplex.

6 Just make the land more understanding.

Thank for are conversation this morning Doug hope this works for you !!!
I did talk to John Mickesic he said he will contact you.

If you need anything let me know

Thanks Mike Dresel

Attachment: 2022-0005 Dresel - Rezone - Application (6959 : 2022-0005 - Micheal Dresel - Rezone)

Department of Planning & Zoning

Mission Statement

The Department of Planning & Zoning shall strive to protect and promote the health, safety and general welfare of all property owners and to protect the environment and physical and natural resources through the application of professional planning practices, the advancement of a county-wide Geographical Information System (GIS), the professional administration and equitable enforcement of all Chippewa County, State and Federal land use codes and ordinances.

Statutory Authority

The statutory authority for the Department of Planning & Zoning is granted based on the program and/or service, which is provided to the residents of Chippewa County. The individual authority is entangled through the Wisconsin State Statutes and the Wisconsin Administrative Codes. The surveyor authority comes from 59.20, 59.45, 59.72 and 59.74(2). The Planning & Zoning authority comes from the following state statutes: 59.69(3), 59.692(1m), 66.1001(1)(a)1, 66.1001(3), 87.30(1), 87.30(2), 91, 92, 145.01(5) and 145.20(2).

Organizational Chart

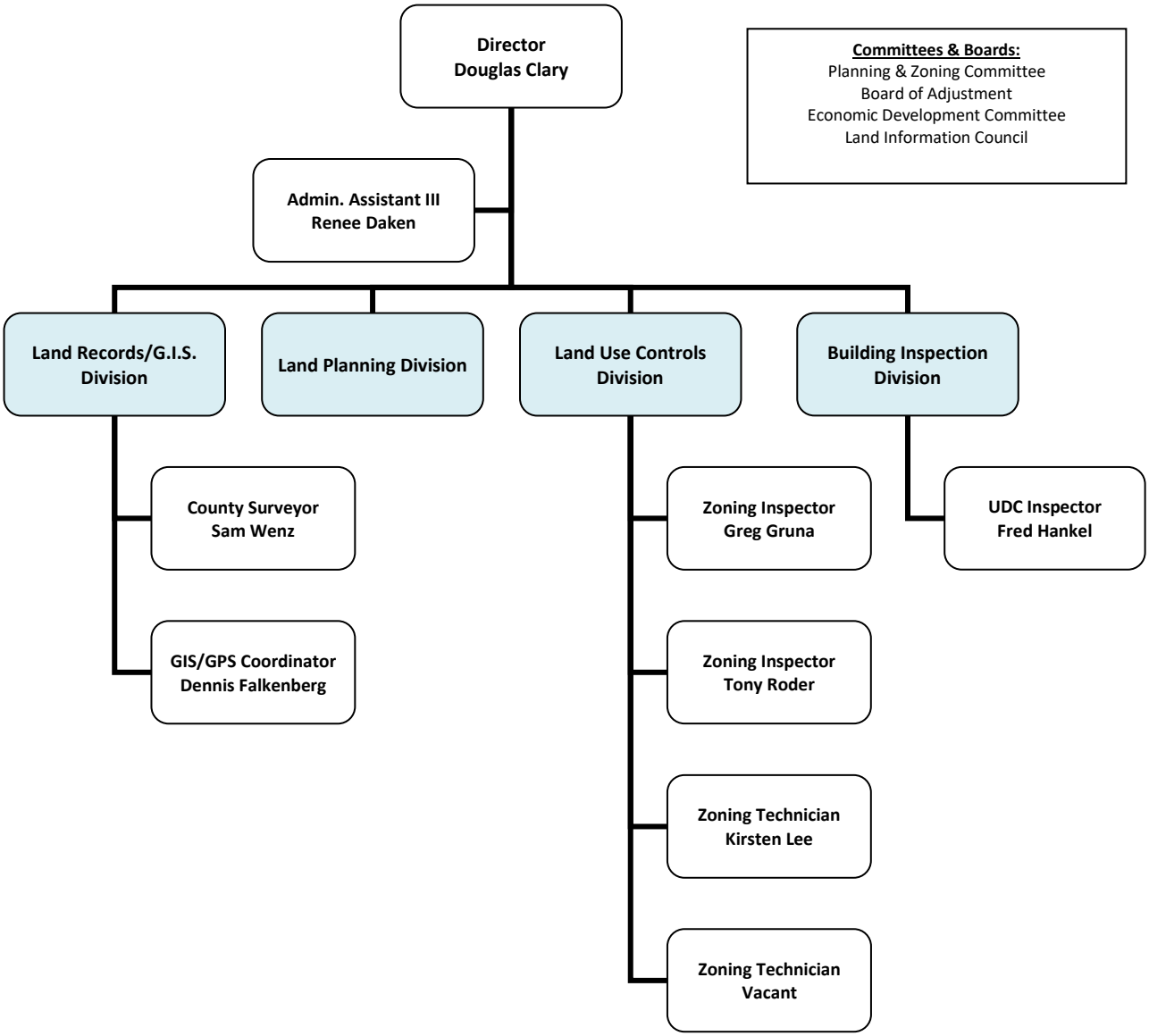

Attachment: PZC Orientation 2022 - 2022-05-02 (6960 : Planning & Zoning Committee Orientation)

Goals

1. Coordinate with local municipalities to increase the effectiveness of current approval processes and to define where efficiencies for review and approval of land use and management activities within Chippewa County can be gained.
2. Educate local elected officials on policies, procedures or regulations, which are in need of revisions, repealing or creation in order to meet the current land use activities or address issues rising for current land use activities.
3. Continue to review the fiscal responsibilities of the State, County and Department in regards to the administration and enforcement of land use ordinances.
4. Encourage staff to be involved with regional and state committees or councils where land use regulations are being reviewed or proposed in order to bring our expertise to the discussion.

Department Budgets Synopsis (2022)

	Planning & Zoning	**Expenditures**	**Revenues**	**Percent**
100-53-56410	Personnel Costs	549,732		93%
	Contracted Services	5,770		1%
	Other Costs	33,225		6%
	Permit/Review Fees		*223,666*	*38%*
	POWTS Maintenance Fee		*50,019*	*8%*
	Contracts		*31,041*	*5%*
	Tax Levy		*284,001*	*48%*
	Totals	**588,727**	**588,727**	

	Building Inspection Fund	**Expenditures**	**Revenues**	**Percent**
100-53-56411	Personnel Costs	131,391		89%
	Other Costs	16,490		11%
	Permit Fees		*147,881*	*100%*
	Totals	**147,881**	**147,881**	
	Non-Lapsing Fund - Audited Balance as of 12/31/2021		**200,000**	
	(Note: Limited to $200,000 per Policy 305)			

	Comprehensive Planning Project	**Expenditures**	**Revenues**	**Percent**
100-53-56413	Personnel Costs (LTE)	5,000		13%
	Contracted Services	35,000		87%
	Fund Balance Applied		*40,000*	*100%*
	Totals	**40,000**	**40,000**	
	Non-Lapsing Fund - Audited Balance as of 12/31/2021		**165,228**	

	Land Records Program	**Expenditures**	**Revenues**	**Percent**
100-54-51715	Personnel Costs	214,798		72%
	Contracted Services	70,000		23%
	Other Costs	15,583		5%
	Surveyor Fees		*5,000*	*2%*
	Fund Balance Applied		*151,000*	*50%*

Attachment: PZC Orientation 2022 - 2022-05-02 (6960 : Planning & Zoning Committee Orientation)

	Tax Levy		*144,381*	*48%*
	Totals	**300,381**	**300,381**	
	Non-Lapsing Fund - Audited Balance as of 12/31/2021		**300,278**	
	(Note: Limited to $350,000 per Policy 305)			

100-54-51725	**Platbook/Roadmap Publishing**	**Expenditures**	**Revenues**	**Percent**
	Other Costs	1,250		100%
	Sale of Plat Books		*1,250*	*100%*
	Totals	**1,250**	**1,250**	
	Non-Lapsing Fund - Audited Balance as of 12/31/2021		**19,426**	
	(Note: Limited to $75,000 per Policy 305)			

100-54-51912	**Tax Deed - Type A Sales**	**Expenditures**	**Revenues**	**Percent**
	Contracted Services	50,000		81%
	Other Costs	12,000		19%
	Gain/Loss on Tax Deed Sales		*62,000*	*100%*
	Totals	**62,000**	**62,000**	
	Non-Lapsing Fund - Audited Balance as of 12/31/2021		**147,950**	
	(Note: Limited to $150,000 per Policy 305)			

Department Priorities for 2022-2024

1. *Scanning of Documents & Public Access:* The Department scanned almost all paper files into into Laserfiche. The ultimate goal was to have the scanned documents, such as sanitary system as-builts and well information, accessed via the GCS web-portal of the County's Geographical Information System (GIS).
2. *Electronic Submittals:* Review the application process to provide for the electronic submittals of the applicable information for permit review. In addition, review the process for the acceptance of payment by credit card in the office and online.
3. *GCS Permit Tracking Module:* The Department will continue to improve the permitting module for efficiencies in the application and approval process for land use permits.
4. *Private Onsite Wastewater Treatment Systems (POWTS) Inventory and Maintenance:* The Department will continue to improve and refine the county-wide program, which tracks the required maintenance for all POWTS systems. This will include a format for following up on property owners whose records we did not receive.
5. *FEMA Mapping:* The Department will seek to use the County's LiDAR Data (acquisition to occur in 2020) to assist in the revisions to the current floodplain maps to accurately display the floodplain boundaries. This will require financial assistance from local, county, state or federal entities.
6. *County Land Use Ordinances:* The Department will continue to work on upgrades to the county's land use ordinances to meet the current and future development needs.
7. *County Zoning Ordinance:* The Department will continue to work with the towns who have adopted the Chippewa County Zoning Ordinance on revisions to improve the ordinance. A focal point will be to address the agricultural district by proposing additional agricultural districts.
8. *County Uniform Dwelling Code (UDC):* The Department will review and upgrade the uniform dwelling code ordinance to meet the Wisconsin minimum requirements. Also, the Department will make

Attachment: PZC Orientation 2022 - 2022-05-02 (6960 : Planning & Zoning Committee Orientation)

recommendations on how to improve the ordinance, including cross-training of department staff for inspections, to meet the concerns of residents and builders.

9. *Regional Approach to Land Use Administration and Enforcement:* Open up discussions with surrounding Counties and Municipalities on how we can assist each other with the administration and enforcement of land ordinances.

10. *Geodatabase Implementation and Maintenance:* The Department will continue with a geo-database design that will allow for all land records and GIS layers to be within one system and accessible for most individuals via the internet. This will include working with the municipalities, such as the Village of Lake Hallie and the City of Bloomer, to fold their individual information within the Counties framework.

11. *Land Records Modernization:* The Department will continue to improve the access of land records through the internet. A continued and enhanced focus will be the monumentation of the missing section corners.

12. *Aerial Photography Acquisition:* The Department is tentatively planning to acquire Aerial Photography in the Spring on 2023. In the Spring of 2024, select areas of the county will be flown for the acquisition of 3" aerial photography. Chippewa County's aerial photography is one of the best collections in the State of Wisconsin.

Attachment: PZC Orientation 2022 - 2022-05-02 (6960 : Planning & Zoning Committee Orientation)

ALTERNATE 1 (REVISED 5/4/22)

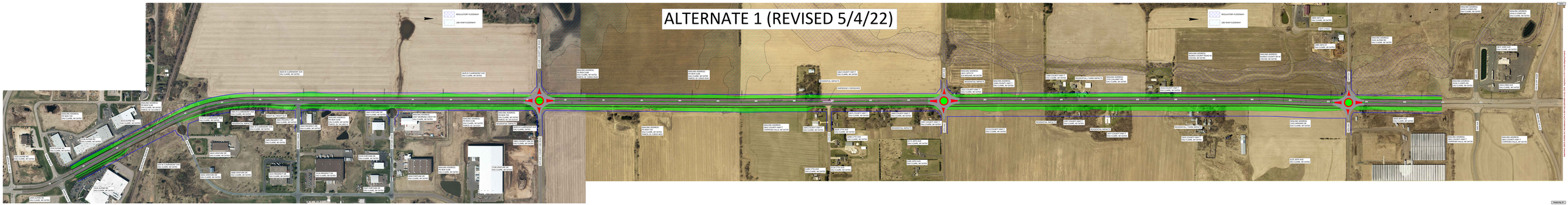
REGULATORY FLOODWAY
100-YEAR FLOODWAY
2422 N CLARKSBURY AVE
TWO CLARKS, WV 26705
2422 N CLARKSBURY AVE
TWO CLARKS, WV 26705
MAILING ADDRESS:
RFD 1 BOX 1
CHAPMAN FALLS, WV 26705
MAILING ADDRESS:
RFD 1 BOX 1
CHAPMAN FALLS, WV 26705
2422 COUNTY SHAFT E
TWO CLARK

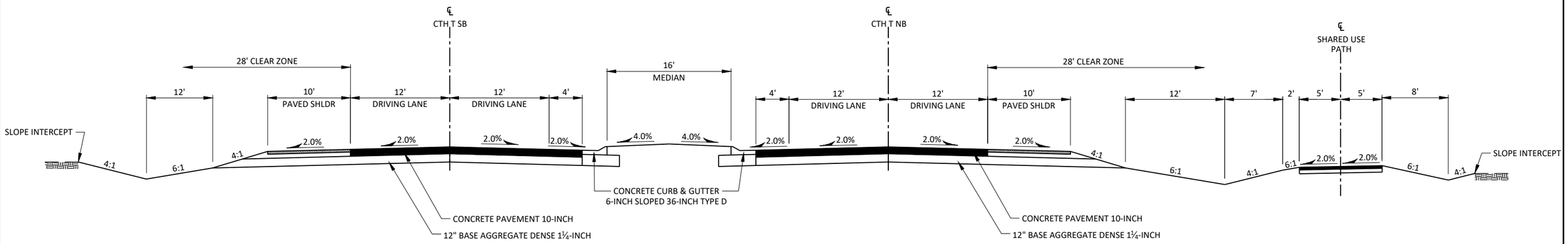

TYPICAL FINISHED SECTION

ALTERNATE 1

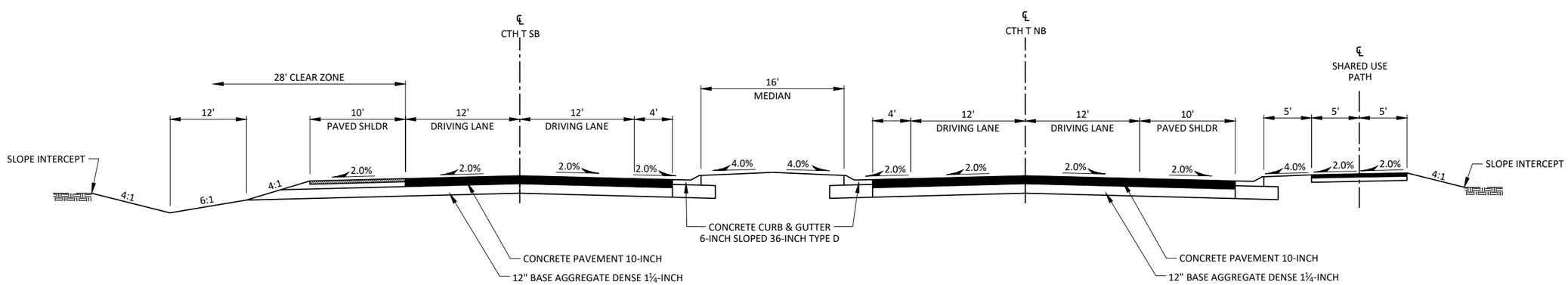

TYPICAL FINISHED SECTION

ALTERNATE 1

PROJECT NO: 0000-00-00	HWY: CTH T	COUNTY: EAU CLAIRE & CHIPPEWA	TYPICAL FINISHED SECTIONS	SHEET	E

FILE NAME : S:\PROJECTS\E30170 EAU CLAIRE CO HWY - CTH T CORRIDOR LAYOUT AND MAPPING\SHEETSPLAN\TYPICALS\E30170_TYPICALS.DWG PLOT DATE : 4/29/2022 8:06:48 AM PLOT BY : JONAH DRAKE PLOT SCALE : 1" = 1' LAYOUT : FINISHED (2)

Attachment: CTH T Typical Sections (7018 : Alignment in CTH T Corridor Mapping Project)

STATEMENT OF EXPLANATION
ESTABLISH REGULAR COMMITTEE MEETING DATES & TIME

County ordinance Sec. 2-82 states that “All standing committee board chairs shall, at the first regular meeting, establish a regular meeting date and time with due consideration given to the scheduling conflicts, including working hours of each member and the County Administrator. Notification of these regular meeting dates shall be placed on file in the office of the County Clerk and the County Administrator."

Typically, the Planning & Zoning Committee has met at 4:30 p.m. on the third Thursday of the month. However, there are some months where we will need to meet on the fourth Thursday of the month because of how the Zoned Town meeting schedule is set-up.

Preliminary Dates:

May 19, 2022
*June 23, 2022
July 21, 2022
August 18, 2022
*September 22, 2022
October 20, 2022
November 17, 2022
*December 15, 2022

**Denotes the fourth Thursday of the Month.*